Series 320 & 321

Terminal Blocks for PC-Boards Pluggable with Pin Header Strips (320 & 321系列)

印刷線路板用接線端子座 - 車床銅柱

Front Wire Inlet Type - Top Screw, Spacing 5.0mm or 10.0mm, Height Over PC-Board 11.0mm

前方入線型 - 頂部操作，間距5.0mm或10.0mm，殼體高度11.0mm

320-031-12-00

320-031-12-00
(With Pin Header)

321-031-00-00

SPECIFICATIONS 技術資料

MATERIAL 材料

- **Contact 觸點(metal housing 金屬殼體):**
  Brass, Tin plated / 黃銅，銅錫電鍍
- **Terminal Screw 螺絲:**
  Steel galvanized and chromatized / 鋼，五彩電鍍
- **Wire Guard 保護片:**
  Brass, Tin plated / 黃銅，鍍錫
- **Insulator Body 絕緣體(housing 殼體)**
  Poly Butylene Terephthlene, PBT (30% Glass filled) (UL 94 V-0)
- **Pins 針腳(Series 321):**
  Brass, Nickel and Tin plated / 黃銅，銅錫電鍍
- **Insulator Body 絕緣體(Series 321)**
  Polyamide PA66 (UL 94 V-0)

ELECTRICAL 電機方面

Current Rating 工作電流:	
- Stranded Wire	8 Amp
- Solid Wire	16 Amp
Dielectric Strength 電介質:	2500V
Rated Voltage 額定電壓:	300V
Rated Cross Range 額定線徑:	0.5 - 1.0mm²
Resistance to Tracking 絕緣阻值:	5MΩ
Insulation Withstands Voltage 耐電壓:	AC1500V/Min
Rated Cross Section 額定線徑:	1.5mm²
AWG 適用線號:	22 - 14
Stripping Length 剝線長度:	4.0 - 4.5mm

MECHANICAL 機械方面

Operating Temperature 工作溫度:	-30°C to +120°C
Short Time Peak Temperature 短暫能容溫度:	+200°C max

RoHS

SERIES 321 PIN HEADER

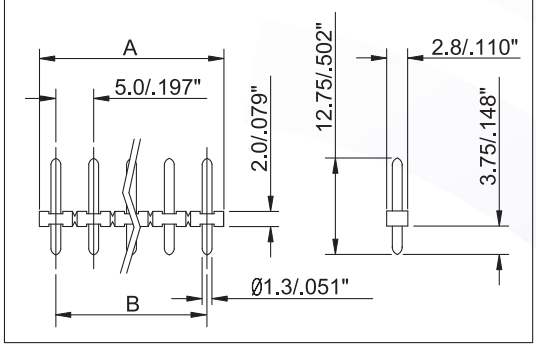

PITCH	Dimension A	Dimension B
5mm	n x 5	(n - 1) x 5
10mm	n x 10	(n - 1) x 10

SERIES 320 TERMINAL BLOCK

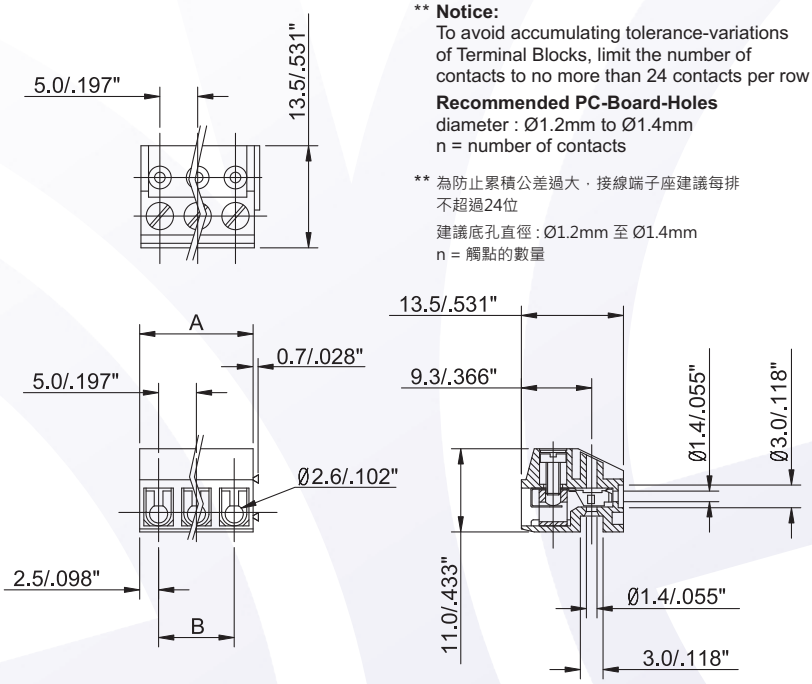

** **Notice:**
To avoid accumulating tolerance-variations of Terminal Blocks, limit the number of contacts to no more than 24 contacts per row

Recommended PC-Board-Holes
diameter : Ø1.2mm to Ø1.4mm
n = number of contacts

** 為防止累積公差過大，接線端子座建議每排不超過24位

建議底孔直徑 : Ø1.2mm 至 Ø1.4mm
n = 觸點的數量

HOW TO ORDER 排序整理

Pin Header → 3 2 1 - X X X - 0 0 - 0 0

Terminal Block → 3 2 0 - X X X - 1 X - 0 0

- Series No. 系列編號
- No. of Pole 針腳數目
- Pitch 間距

1	5.0mm
2	10.0mm

- Color 顏色

1	Grey	灰
2	Blue	藍
3	Black	黑

All Specification changes without prior notice