REVISION RECORD				
REV	ECO	DESCRIPTION	DRFT	DATE
1		料号变更	WF	07/26/06'
2		PC6铜方块改为PC6-PE铜方块，料号由X000000900改为X000001280	WF	11/16/06'
3		品名、料号增加环保标示"(H)"	LJH	12/10/07'
4		增加VDE刻字及参数	Zengy	08/23/08'

Notes:

1. Thickness:8.2mm
2. Operation temperatures:-40℃～+105℃
3. Wire Range:24～10AWG,0.2～6mm²
4. Max.Torque Value:M4,12.24kgf.cm
5. Undimensioned Tolerances:

Pitch range in mm			Naminal dimension range in mm					—
to 6	over 6 to 10	over 10 to 24	to 30	over 30 to 60	over 60 to 100	over 100 to 150	over 150	⌒ / ▱
±0.10	±0.15	±0.25	±0.2	±0.3	±0.5	±0.7	±1.0	0.05/10

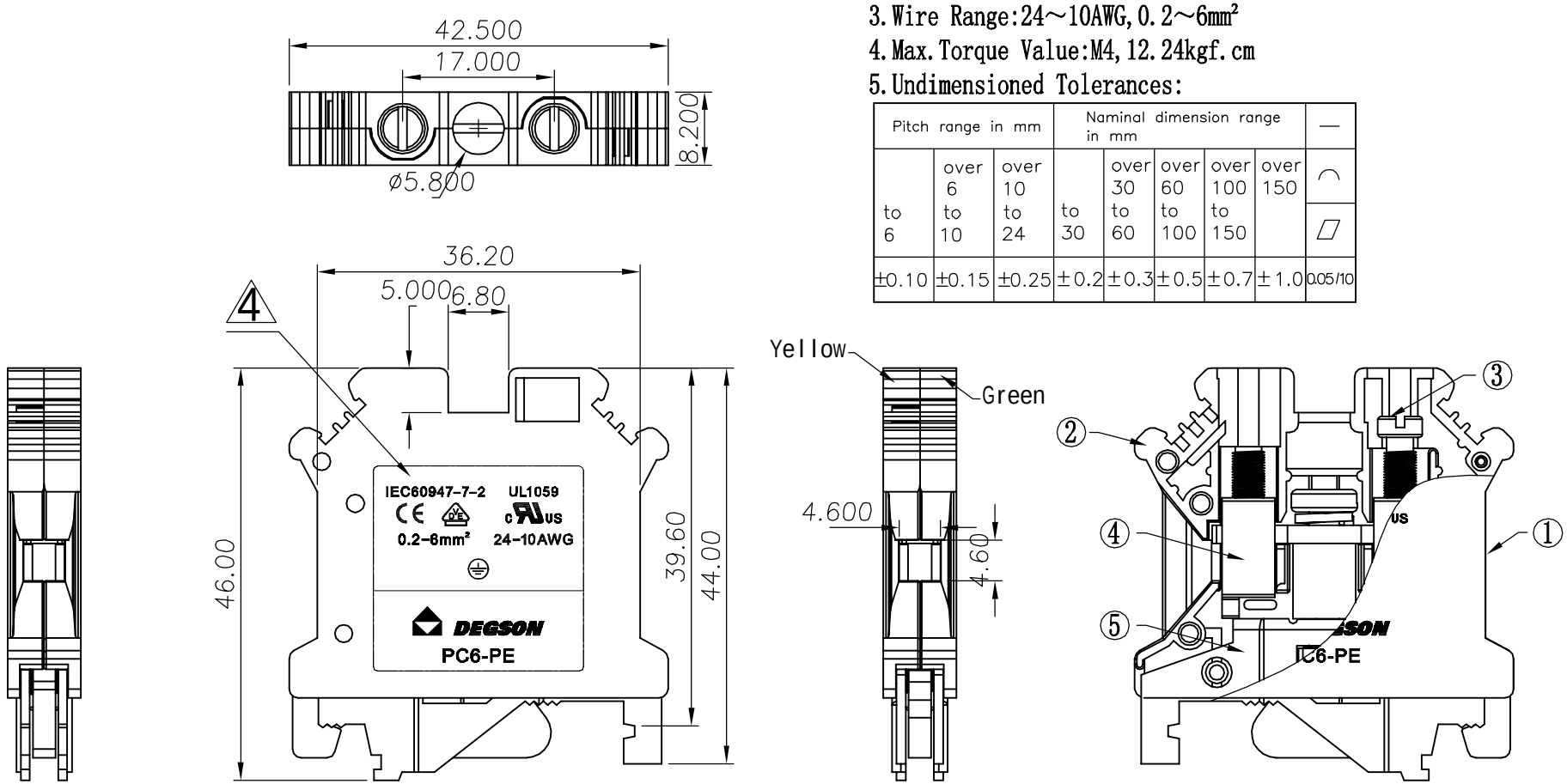

ITEM	NAME OF PART	NO. OF PART	Q"TY	MATERIAL	NOTES
1	PC6-PE-Housing	6016A0401A(H)		PA66	UL94V-0

5	PC6-PE-Ground contact	6016B00010(H)	1		
4	PC6-PE Brass cage	X000001280(H)	2	Brass	Ni Plated
3	PC6 Screw	S000001490(H)	2	Brass	Ni Plated
2	PC6-PE-Housing	6016A0801A(H)	1	PA66	UL94V-0

DETACHED LISTS

MM (INCH)

TOLERANCES EXCEPT AS NOTED

MM	
.0 ±	±
.00 ±	±
.000 ±	±

ANGLES ± 1°

THIRD ANGLE PROJECTION

DFTO LIUM	DATE 11/16/05"	
CHKD	DATE	
MFO	DATE	
APPVL	DATE	
MATERIAL :		
G.E :		
FINISH:		
SCALE :		

DEGSON® 宁波高正电子有限公司 DEGSON ELECTRONICS CO., LTD

NAME PC6-PE-01P-1Y-00A(H)

DRAWING NO. PC6-PE-E01 /PART NO.

SIZE A3 REV T4 08/23/08'

DO NOT SCALE DRAWING

SHEET 1 OF 1